TOA

DYNAMIC MICROPHONE

DM-524B

■DESCRIPTION

A unidirectional microphone with a gooseneck shaft.
Use this microphone in conjunction with the ST-73A desk-top stand (option).

■SPECIFICATIONS

Type	Moving coil microphone
Polar Pattern	Cardioid pattern
Rated Impedance	600 Ω, balanced
Rated Sensitivity	−54.5 dB (1 kHz, 0 dB=1 V/Pa)
Frequency Range	100 Hz − 10 kHz
Output Connector	ø21, 3-pin plug (BTS21P3B)
Finish	Microphone body, Gooseneck shaft: Gold, sparkling paint
Weight	465 g
Usable Stand	ST-73A (option) or ø21 mm 3-pin socket
Accessories	ø21 3-pin receptacle (BTS21R3A)……1, M3×10 screw……3, W3 washer……3, SW3 spling washer……3, M3 nut……3

■APPEARANCE

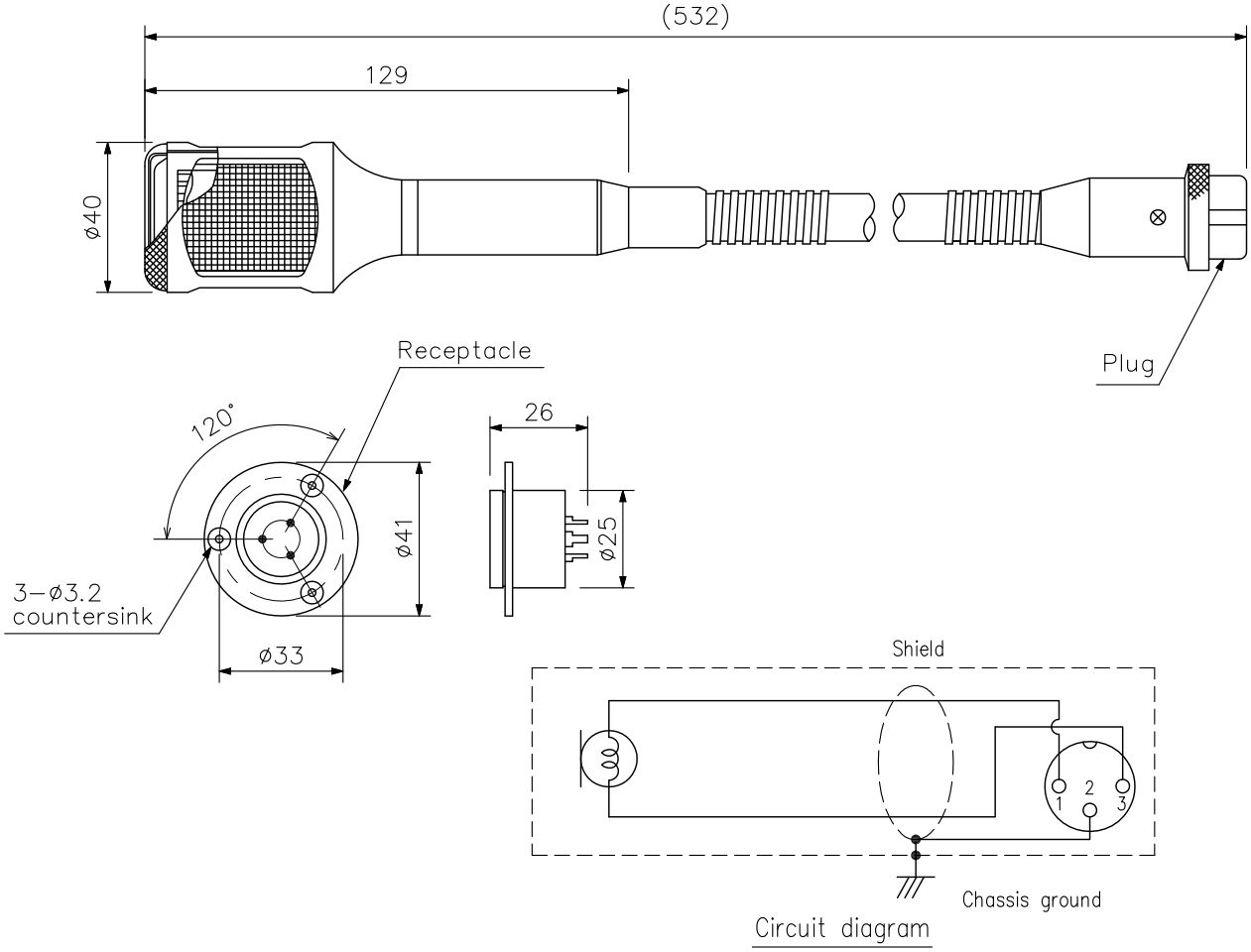

UNIT: mm SCALE: 1/2

Note: Numerical values in parentheses are for reference only.

TOA Corporation

DWG No: GDM00DA1-3