Key Features:

- Parameter auto-setup and motor self-test
- Multi-Stepping inside,Small noise, low heating, smooth movement
- Torque compensation in high speed
- Variable current control technology,High current efficiency
- Accelerate and decelerate control inside, Great improvement in smoothness of starting or stopping the motor
- Support PUL/DIR and CW/CCW modes
- Storage the position of motor
- Optically isolated input and compatible with 5V or 24V
- User-defined micro steps
- Micro-step resolutions and Output current programmable
- Over current and over voltage protection
- Green light means running while red light means protection or off line

Introduction

2DM860H is newest digital stepper motor driver launched by using the latest 32-bit DSP control technology, the user can set any segment within 25600 and multi-range current value within rated current,with built-in micro technology,2DM860H driver greatly improved stability and reduced noise under subdivision. Integrating automatic parameter tuning function inside.it also can adjust the optimal operation parameters automatically for different motors to maximize the performance of the motor.

Specifications

Parameters	Min	Typical	Max	Unit
Output Current (Peak)	2.1	-	8.4	Amps
Supply voltage	18VAC (DC24V)	60VAC (DC80V)	80VAC (DC110V)	VAC
Logic Input Current	-	10	-	mA
Pulse input frequency	-	-	250	KHz
Low Level Time	2.5	-	-	μsec

Cooling	Natural Cooling or Forced Convection	
Environment	Space	Avoid dust, oil frost and corrosive gases
	Ambient Temperature	0°C－65°C
	Humidity	<80%RH
	Vibration	5.9m/s² Max
Storage Temp.	-10°C －80°C	
Weight	Approx. 0.58 Kg	

DIP Switch Setting

1. Introduction Of SW-1

1.1 Current setting:

Current Setting AVG(A)	Peak Value (A)	SW1	SW2	SW3
1.5	2.1	OFF	OFF	OFF
2.25	3.15	ON	OFF	OFF
2.88	4.03	OFF	ON	OFF
3.42	4.78	ON	OFF	ON
4.06	5.69	OFF	OFF	ON
4.60	6.44	ON	OFF	ON
5.25	7.35	OFF	ON	ON
6.0	8.4	ON	ON	ON

1.2 Microstep Setting:

Step/Rev	SW5	SW6	SW7	SW8
400	ON	ON	ON	ON
800	OFF	ON	ON	ON
1600	ON	OFF	ON	ON
3200	OFF	OFF	ON	ON
6400	ON	ON	OFF	ON
12800	OFF	ON	OFF	ON
25600	ON	ON	ON	OFF
51200	OFF	OFF	OFF	ON
1000	ON	ON	ON	OFF
2000	OFF	ON	ON	OFF
4000	ON	OFF	ON	OFF
5000	OFF	OFF	ON	OFF
8000	ON	ON	OFF	OFF
10000	OFF	ON	OFF	OFF
20000	ON	OFF	OFF	OFF
40000	OFF	OFF	OFF	OFF

* SW4: ON=Full current, SW4 : OFF=Half current

Semi-flow function means that no step pulse 200ms, the current driver outputs automatically reduced to 70% of rated output current, to prevent motor heat.

2. Introduction of SW-2

Function Setting:

SW4	ON	Low Level for Enable
	OFF	How Level for Enable
SW3	ON	Max External Pulse Frequency 100K
	OFF	Max External Pulse Frequency 200K
SW2	ON	CW/CCW
	OFF	PUL+DIR
SW1	ON	Self-test Mode (60Rpm/Min)
	OFF	External Pulse Control Mode

P1 Pin Assignment

Signal	Name	Remark
PLS+	Pulse signal+	Compatible with 5v or 24v
PLS-	Pulse signal-	Compatible with 5v or 24v
DIR+	Direction control signal+	Compatible with 5v or 24v
DIR-	Direction control signal-	Compatible with 5v or 24v
ENA+	Enable signal+	Compatible with 5v or 24v
ENA-	Enable signal-	Compatible with 5v or 24v
ALM+	Alarm output positive	Open collector output
ALM-	Alarm output negative	Open collector output

P2 Pin Assignment

The P2 I/o high voltage interface description

Name	Function	Instructions
A+、A- B+、B-	Electrical wiring	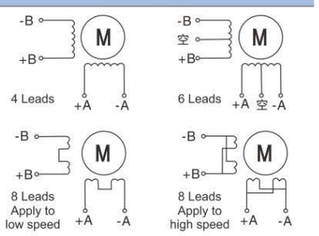
AC1 AC2	voltage input	Between AC18~80V, ,DC24-110V refer to motor specs

Signal waveform and timing

➡ **Power on sequence**

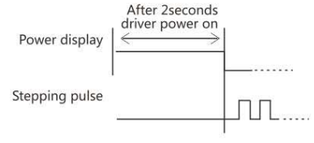

➡ **Input signal waveform and timing**

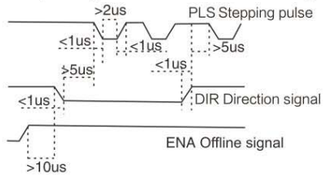

Note:
Driver power-up time depends on the applied AC driver voltage Magnitude,under AC60V power-up time need 2seconds typically.

3. Introduction of SW-3

Smoothing setting:

D0	No Smooth
D1-D7	Smoothness Gain

The smoothness Gain is to improve the smoothness of the speed of the motor while acceleration or deceleration.

The larger the value, the smoother the speed in acceleration or deceleration.

Dimensions (mm)

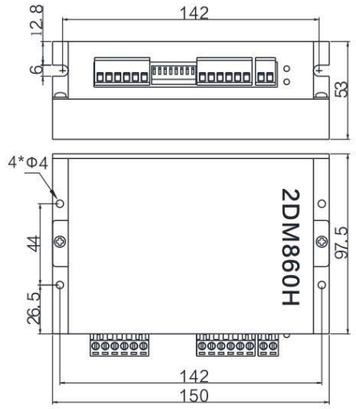

Wiring

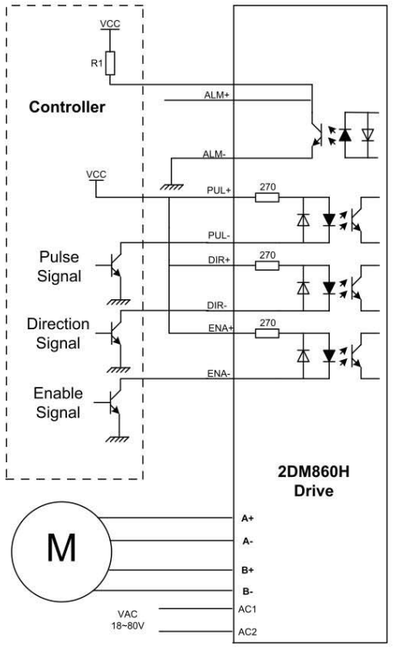

Remark:* VCC is compatible with 5V or 24V;
R1(3~5K) must be connected to control signal terminal.