Panel(Piping) Type Flowmeter

NBDC

NBDC®
Measuring & Control

LZT-10 Series Piping type Flowmeter

Model	Measuring range	Medium	Remarks
LZT-1001G	0.1~1GPM/0.5~4LPM	Water	Circular
LZT-1002G	0.2~2GPM/1~7LPM		
LZT-1005G	0.5~5GPM/2~18LPM		

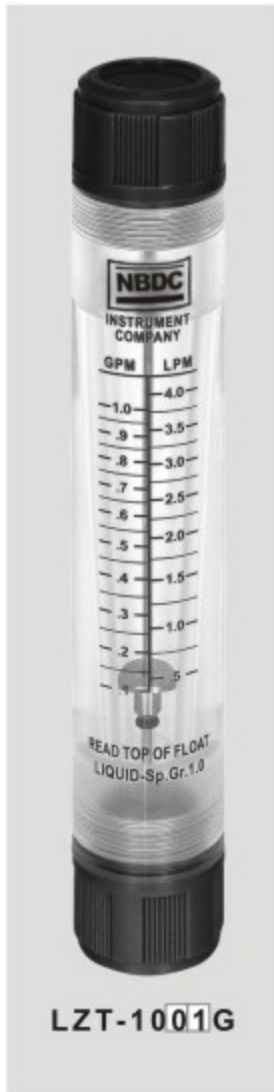

LZT-1001G

LZT-1002G

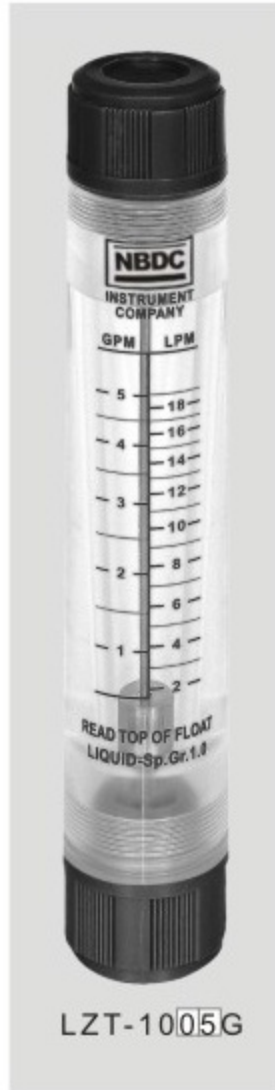

LZT-1005G

Dimensions(mm)

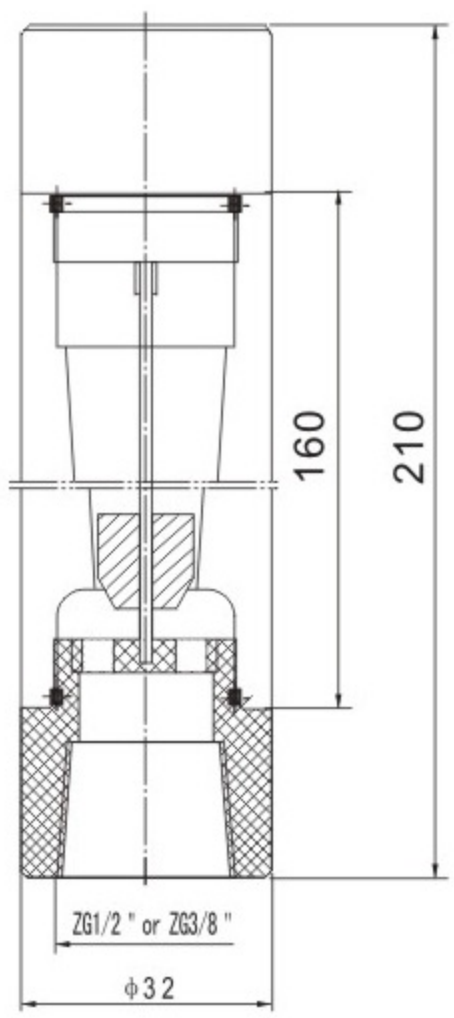

LZT-10□ □G